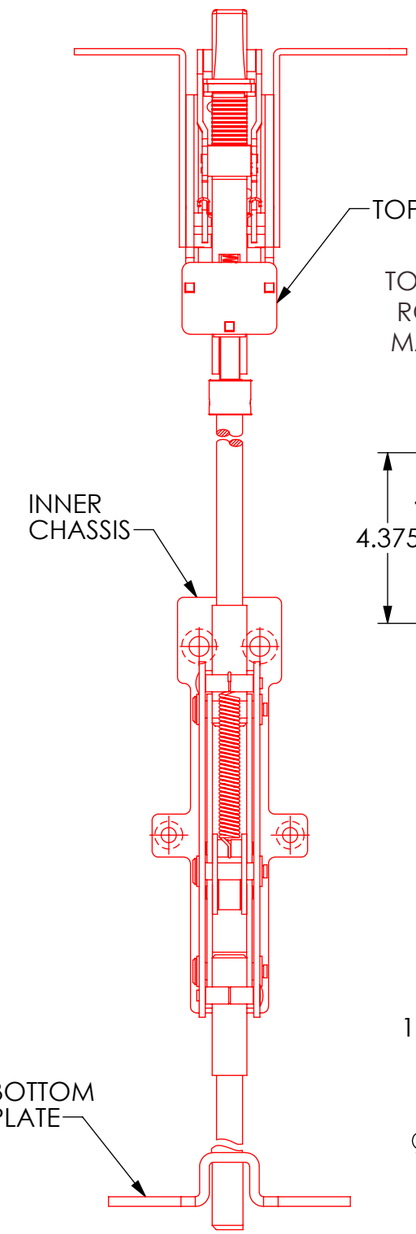

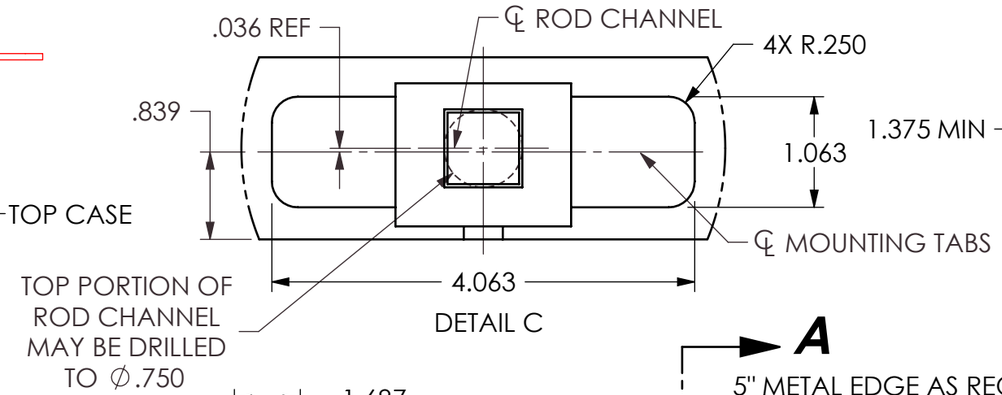

DETAIL C

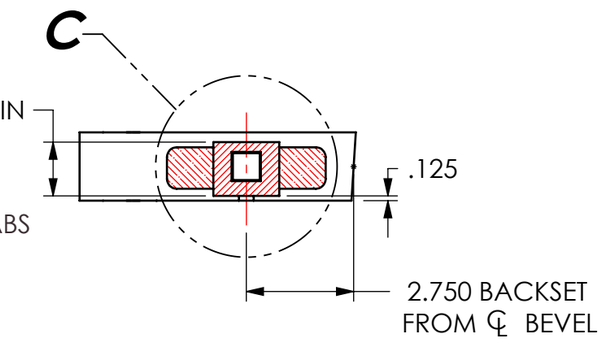

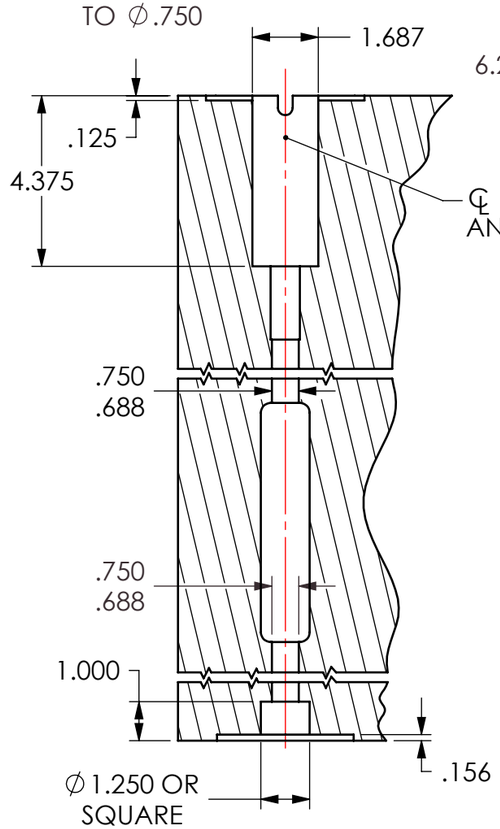

SECTION A-A

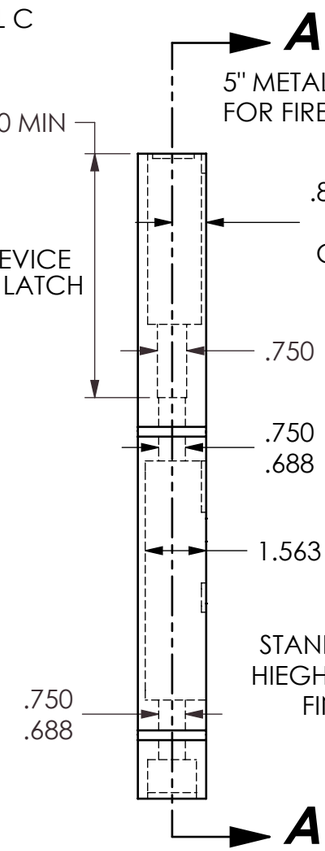

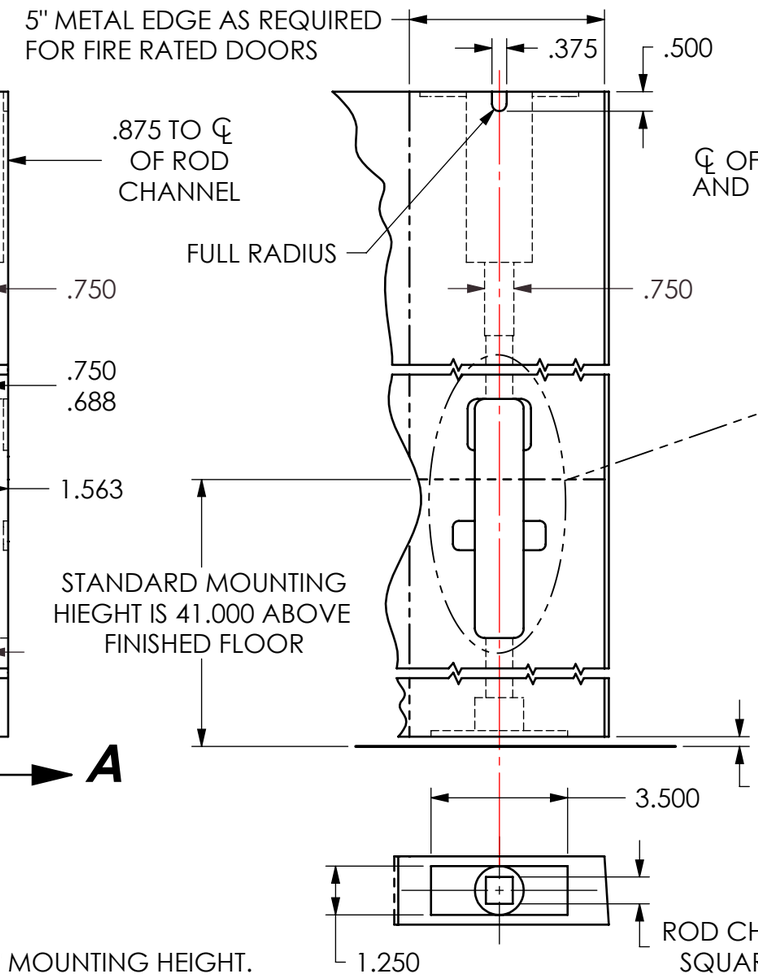

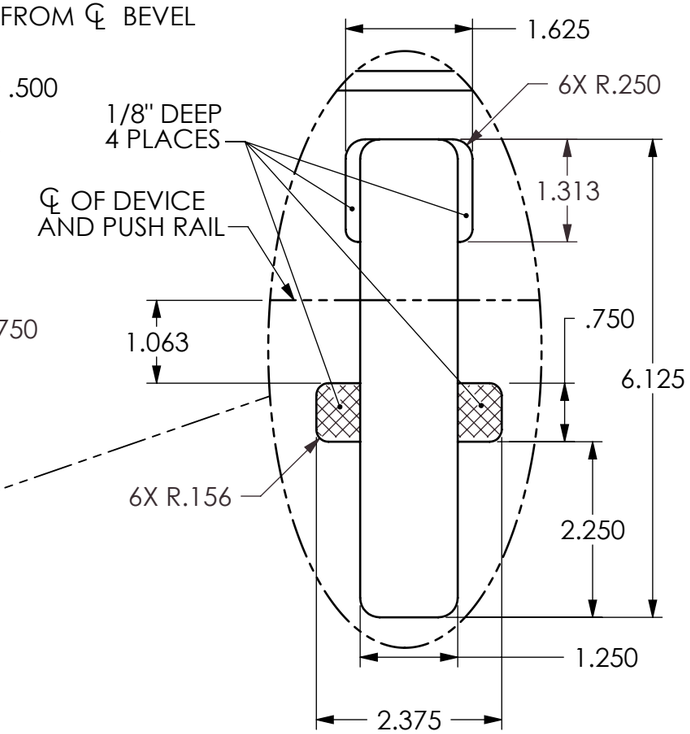

NOTES:
1. DIMENSIONS GIVEN ARE FROM INSIDE FACE OF DOOR, FOR 2 3/4" BACKSET AND 41" MOUNTING HEIGHT.
2. ALL MOUNTING HOLES TO BE PILOT DRILLED IN THE FIELD.
3. SEE TEMPLATES 4569 AND 4571 FOR ELECTROLYNX DETAILS WHEN NEEDED.
4. SURFACE OF DOOR WHERE EXIT DEVICE IS TO BE INSTALLED MUST BE FLUSH.
5. TEMPLATE SHOWS ONLY DEVICE PREP, SEE TEMPLATE 4449 (STANDARD) OR 4649 (ALUMINUM FRAME) FOR STRIKES AND APPROPRIATE TEMPLATE FOR TRIM.
6. **CAUTION:** DEVICE WILL NOT OPERATE PROPERLY WITHOUT STRIKES INSTALLED. FRAME MUST BE PREPARED TO ALLOW STRIKE TO MOUNT FLUSH.
7. TOLERANCE ON ALL DIMENSIONS IS ±.016".

SARGENT® Manufacturing Company
100 Sargent Drive New Haven, CT 06511

WOOD DOOR MANUFACTURERS TEMPLATE:
WD8600 (ALL VERSIONS)

RELEASE DATE
JUNE 8, 2009

TEMPLATE NO.
4431 J