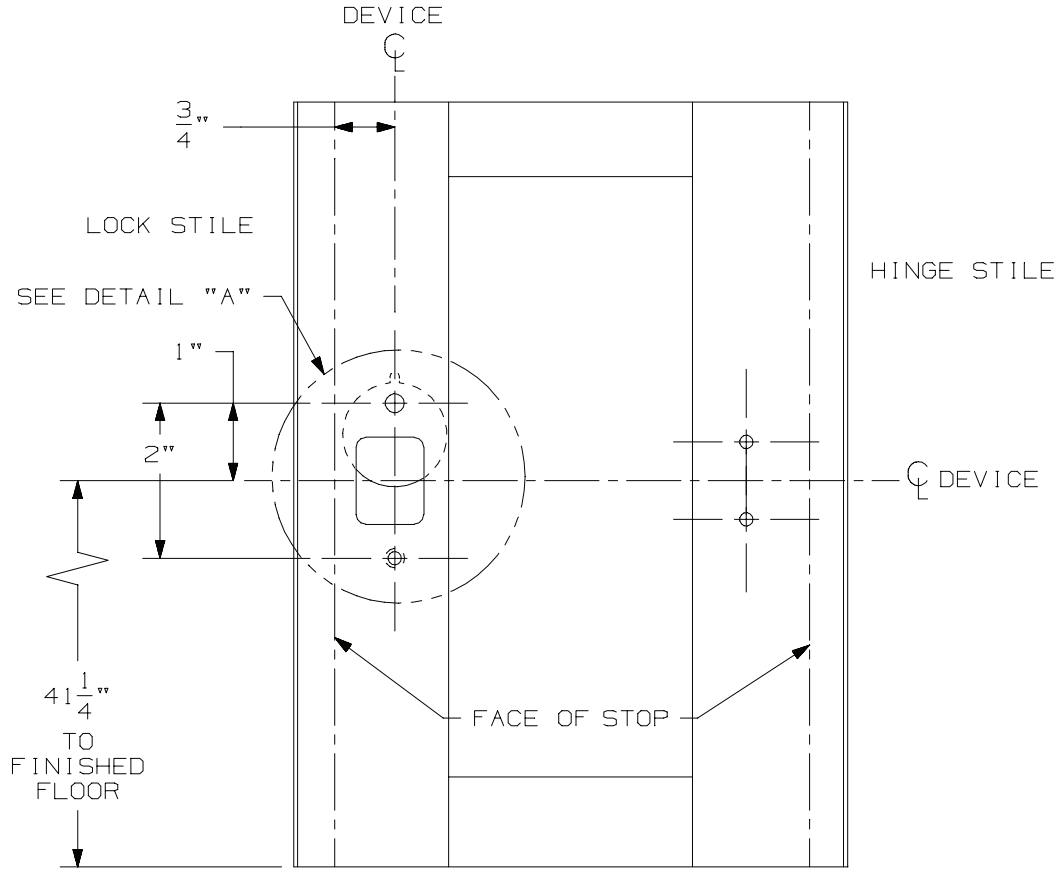

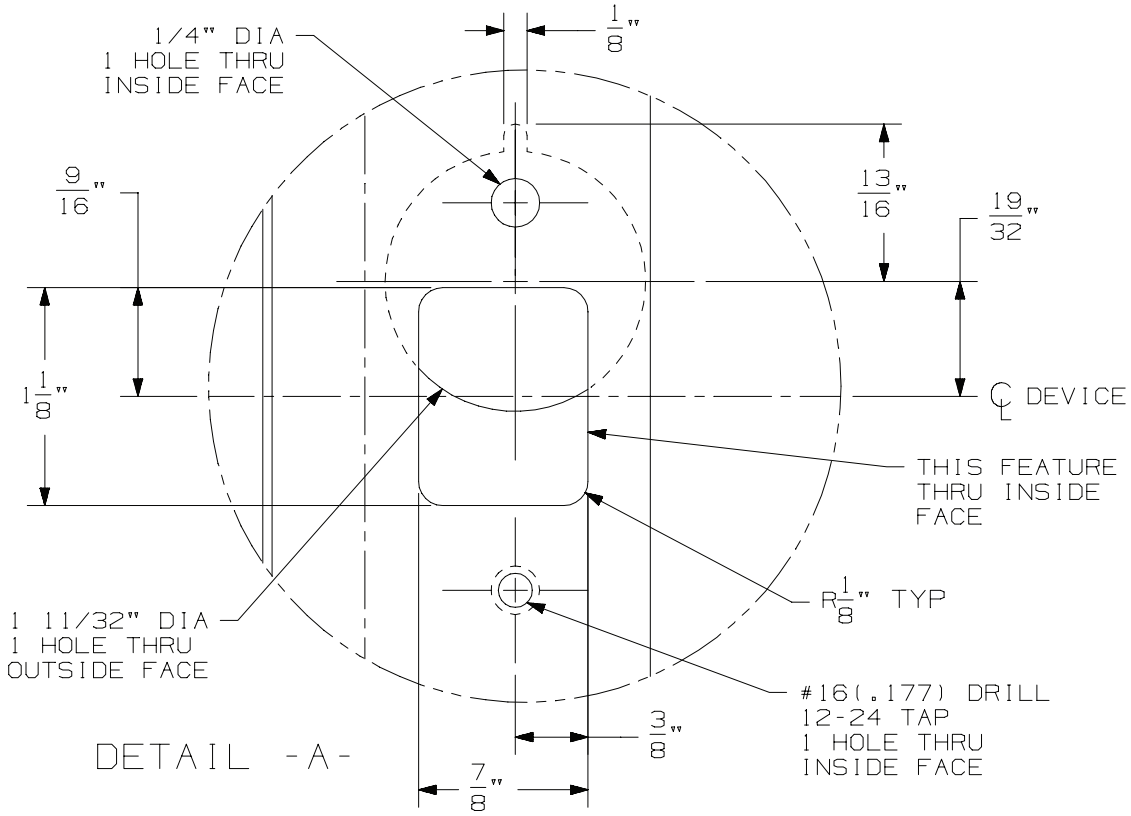

DETAIL -A-

NL OR HB CYLINDER FOR ALUMINUM OR HOLLOW METAL SINGLE DOORS	**FALCON**®	
NOTE:	TEMPLATE NUMBER: 4270200109_c	DATE: 12-23-14