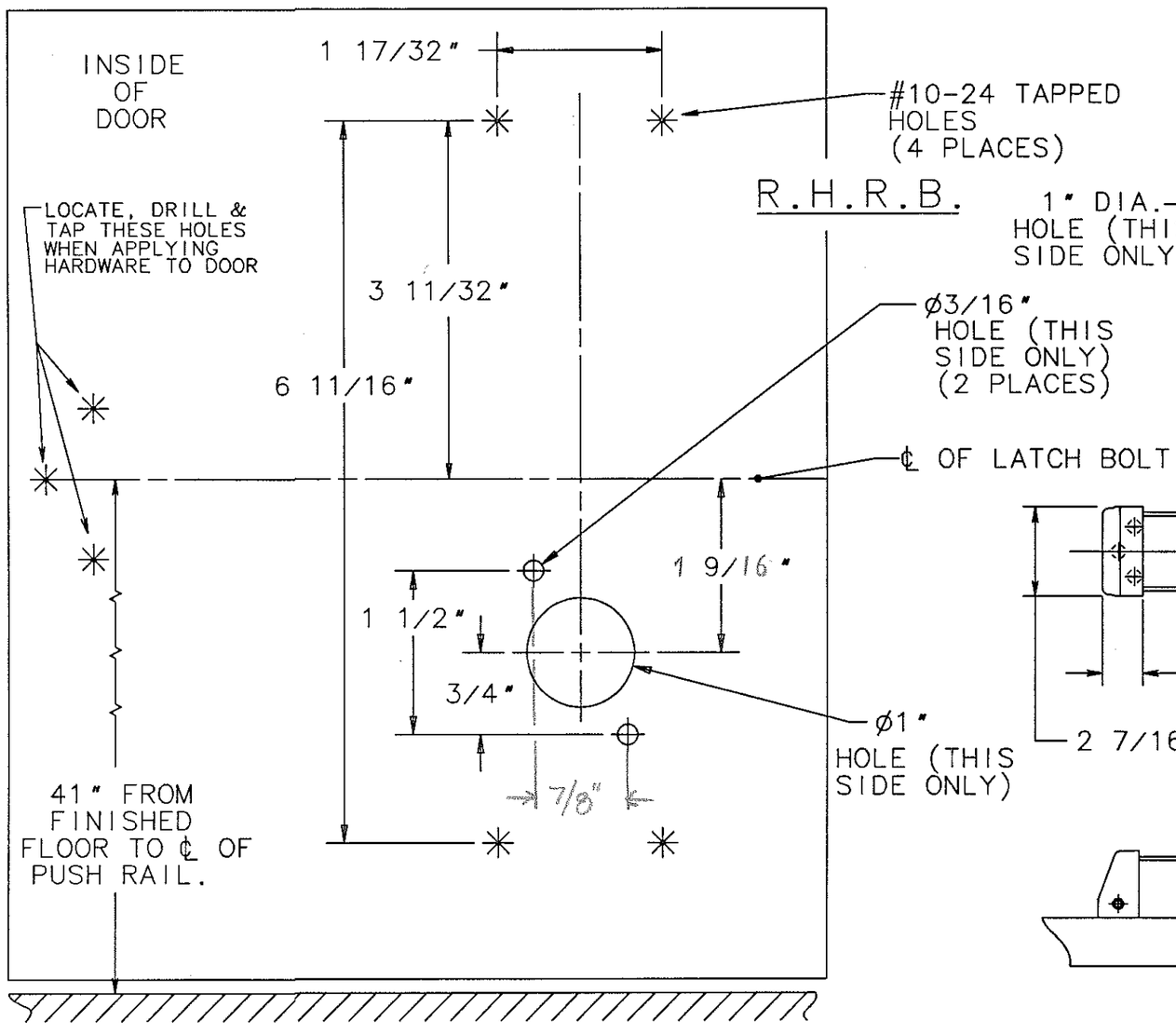

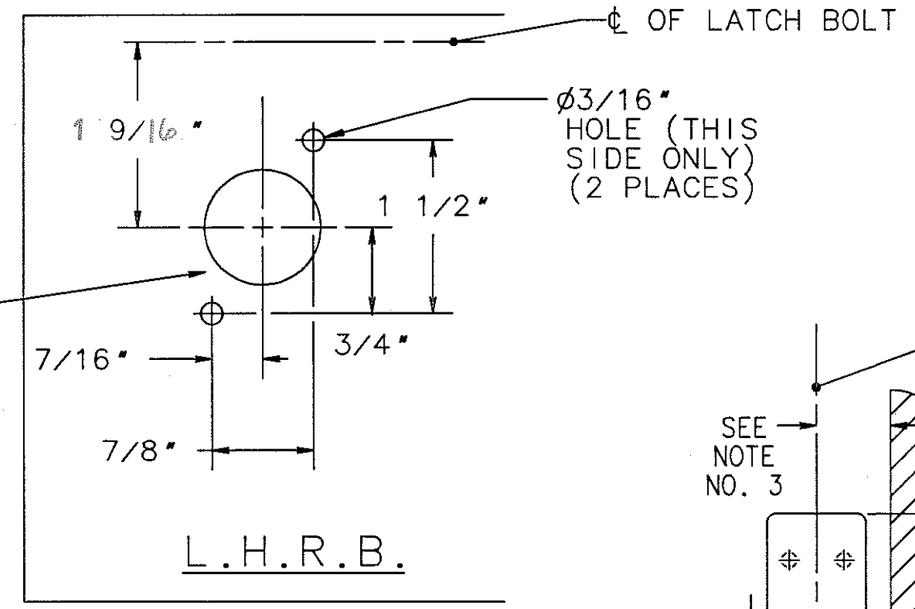

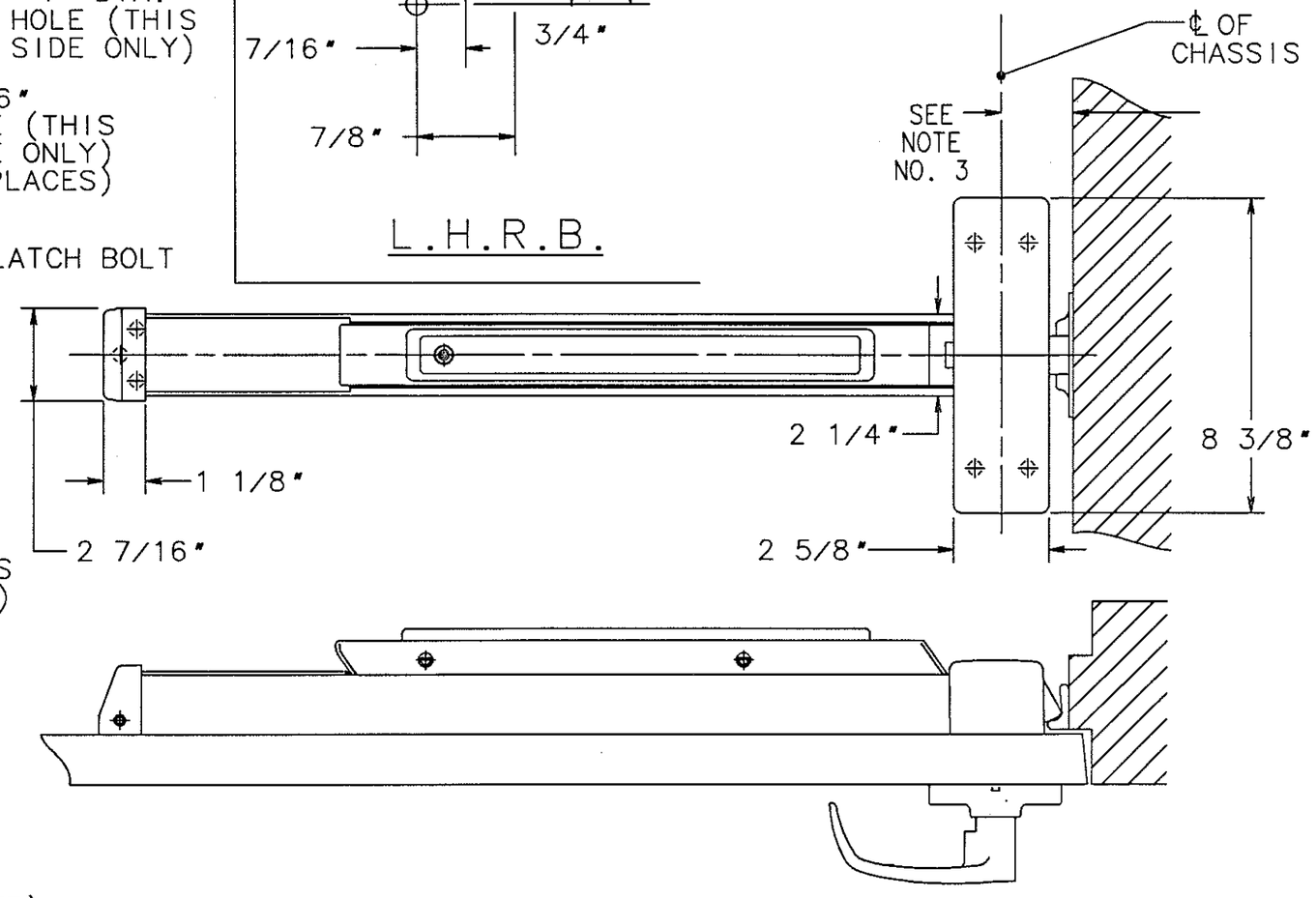

(7) FOR GLASS BEADED DOORS, IF GLASS BEAD CANNOT BE REMOVED, USE GLASS BEAD SHIM KIT (AVAILABLE ON ORDER).

(6) FOR OUTSIDE TRIM SEE TEMPLATE NO. 4428.

(5) SURFACE OF DOOR WHERE EXIT DEVICE IS TO BE APPLIED MUST BE FLUSH.

(4) SEE MASTER SHEET No. 4019 FOR AREAS REQUIRING REINFORCEMENTS.

(3) FOR MOUNTING LOCATION SEE STRIKE TEMPLATE #4004 FOR 8888 EXIT DEVICE (641 STANDARD STRIKE) 4300 FOR 12-8888EXIT DEVICE (649 STANDARD STRIKE).

(2) WE RECOMMEND THAT ALL TAPPED HOLES BE DRILLED & TAPPED IN FIELD.

(1) TOLERANCE ON ALL DIMENSIONS ±1/64".

SARGENT® Manufacturing Company
100 Sargent Drive New Haven, CT 06511

TEMPLATE: 8888 & 12-8888 RIM TYPE EXIT DEVICE FOR USE WITH "LL" TYPE LEVER HANDLE TRIM	RELEASE DATE 26 JAN01
	TEMPLET NO. 4429 B