DESCRIPTION	ARM TYPE	MAXIMUM DOOR OPENING		RANGE OF HOLD OPEN
		WITH BUMPER	WITHOUT BUMPER	
REGULAR ARM	POT/POTB	95°	100°	
HOLDER ARM	PHT/PHTB	95°	100°	85° TO 95°

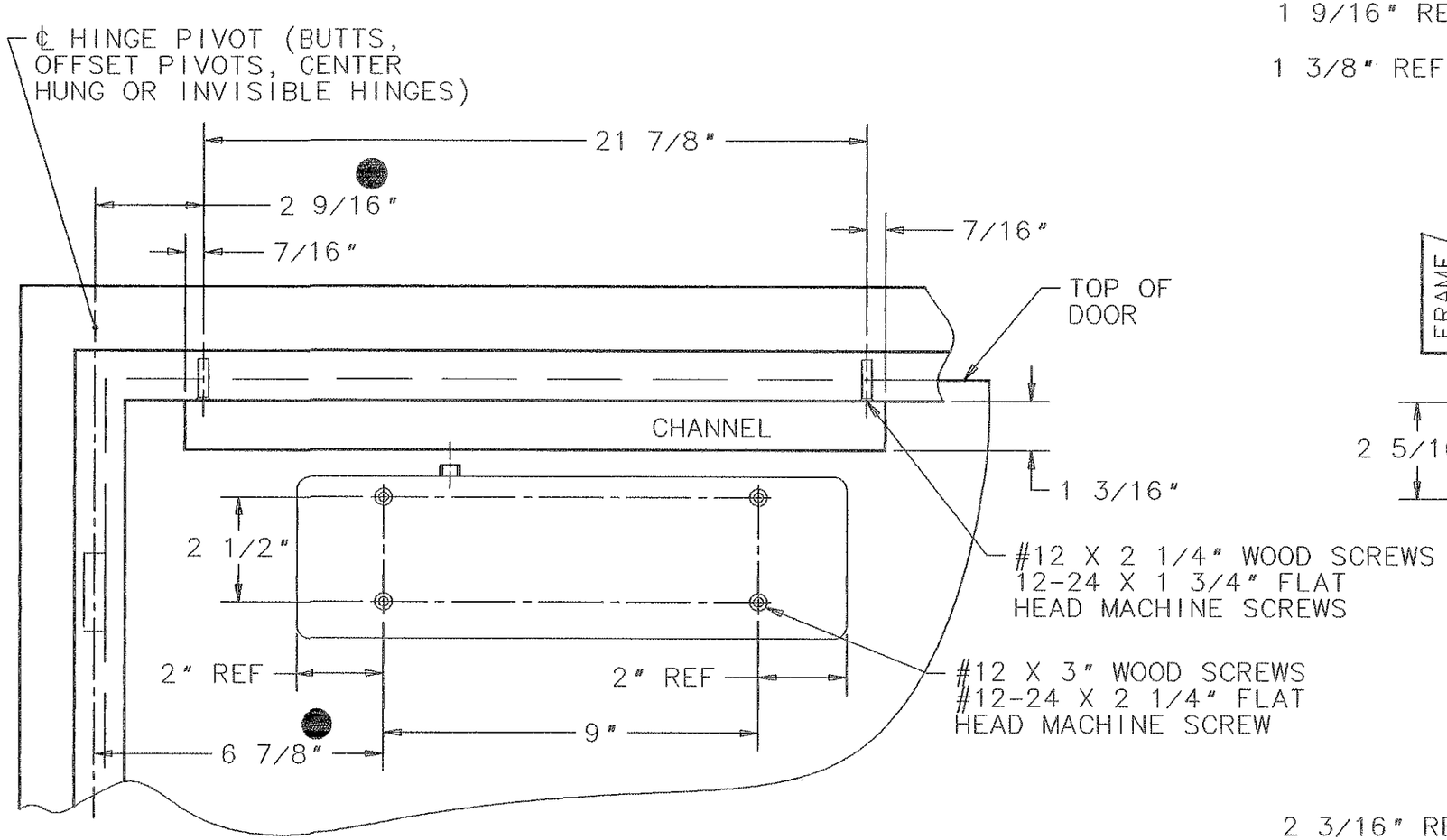

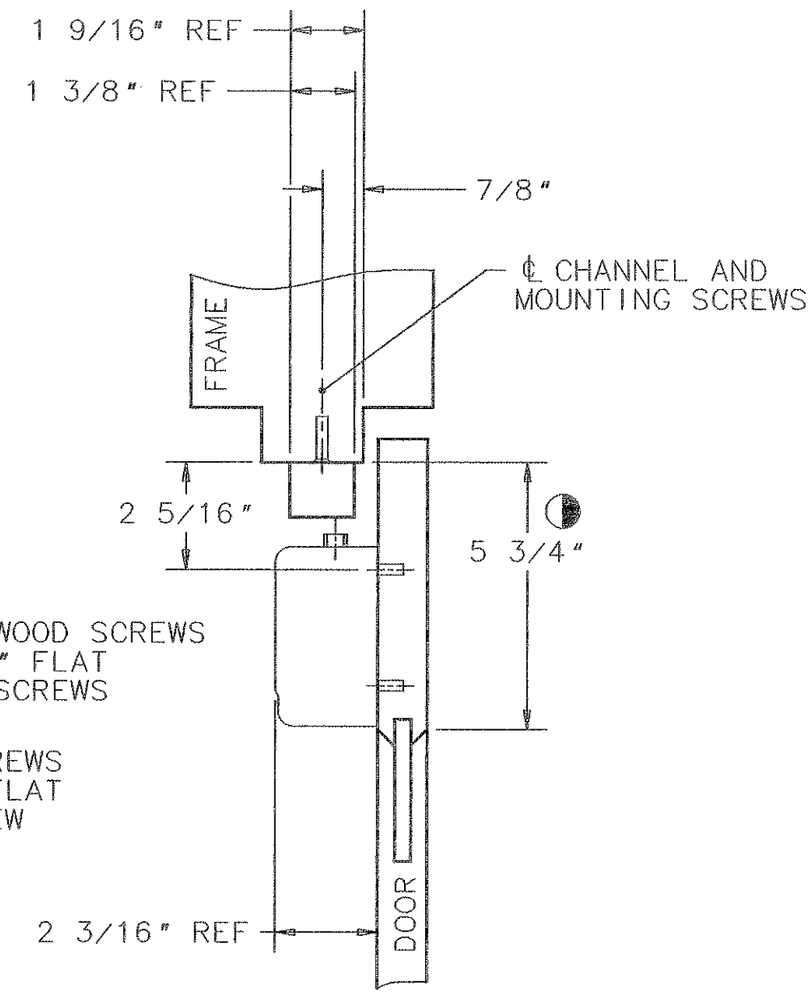

(3) ● THIS DIMENSION IS TAKEN FROM HINGE EDGE OF DOOR FOR INVISIBLE HINGES.

(2) LEFT HAND DOOR SHOWN. RIGHT HAND DOOR OPPOSITE.

(1) 12 GUAGE MIN. REINFORCEMENT REQUIRED FOR METAL DOORS AND FRAMES.

(4) ◑ SPACE REQUIRED TO MOUNT CLOSER ON RAIL. IF SPACE IS LESS THAN SHOWN USE 351-D DROP PLATE. SEE DATA SHEET A6745 FOR DETAILS.

SARGENT MFG. COMPANY — NEW HAVEN, CONN. 06511

DATA SHEET: 351 SERIES CLOSER TRACK TYPE APPLICATION (PUSH SIDE MOUNTING) POT/POTB AND PHT/PHTB ARMS

EFFECTIVE DATE SEPT. 99

TEMPLET NO. A6750 B