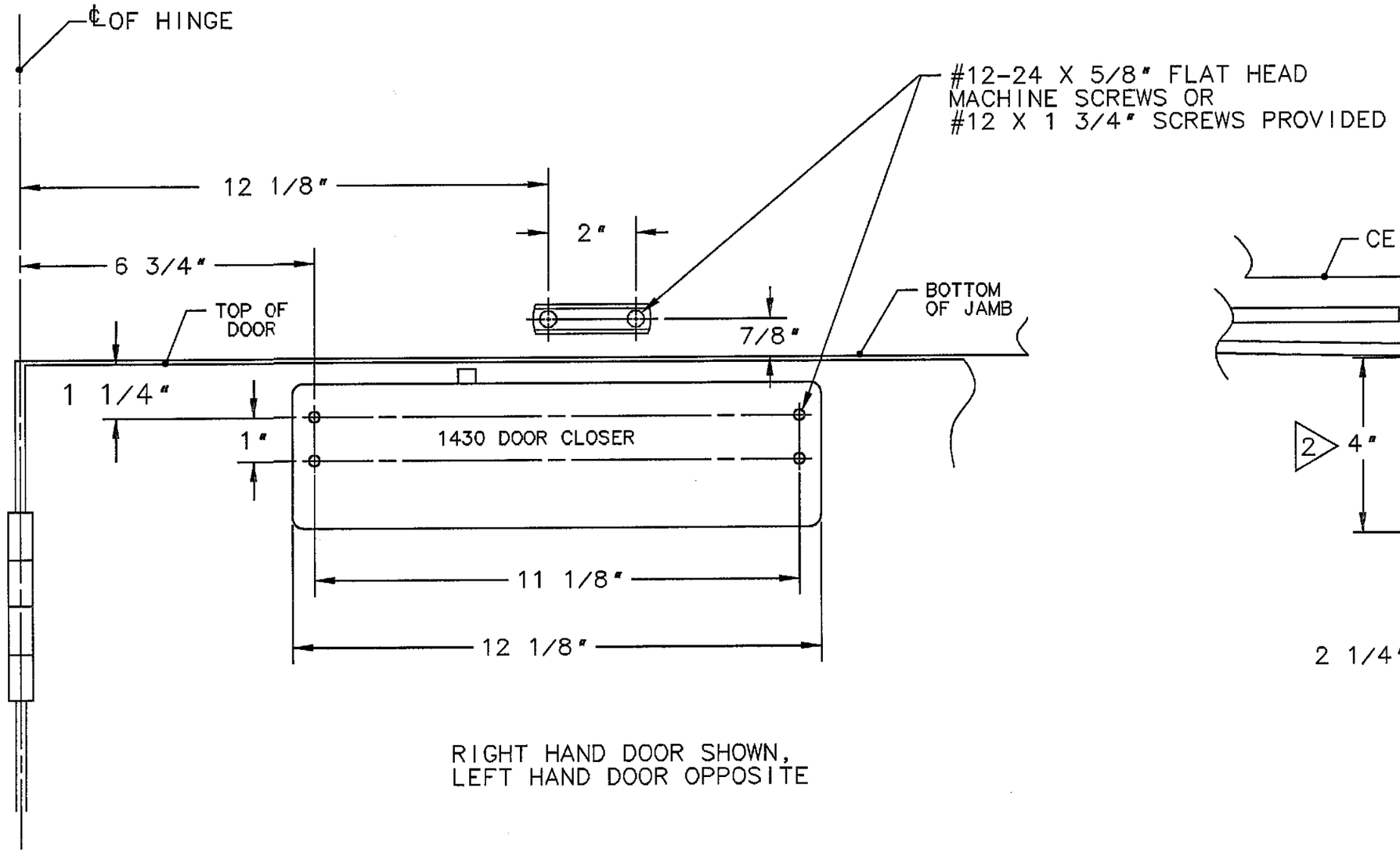

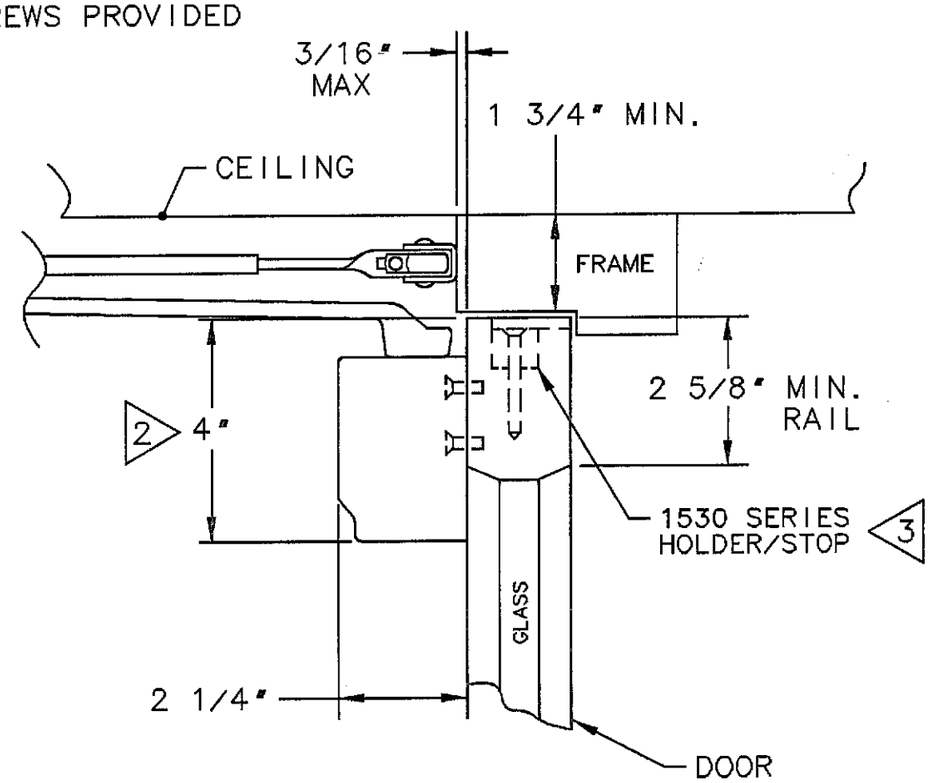

NOTES:

1. REINFORCE METAL DOORS AND FRAMES PER ANSI A250.8 & SDI-100 STANDARDS, 12 GAUGE RECOMMENDED.

2. A 1430-J COVER PLATE MAY BE USED WHEN CLOSER IS VISIBLE THROUGH GLASS.

3. FOR 1530 INSTALLATION, SEE TEMPLATES A7485 THRU A7487

SARGENT® Manufacturing Company
100 Sargent Drive New Haven, CT 06511

DATA SHEET: 1430 SERIES CLOSER WITH STANDARD APPLICATION O & RO ARM & 1530 SERIES HOLDER OR STOP	EFFECTIVE DATE 18 DEC 03
	TEMPLATE NO. A7549 A