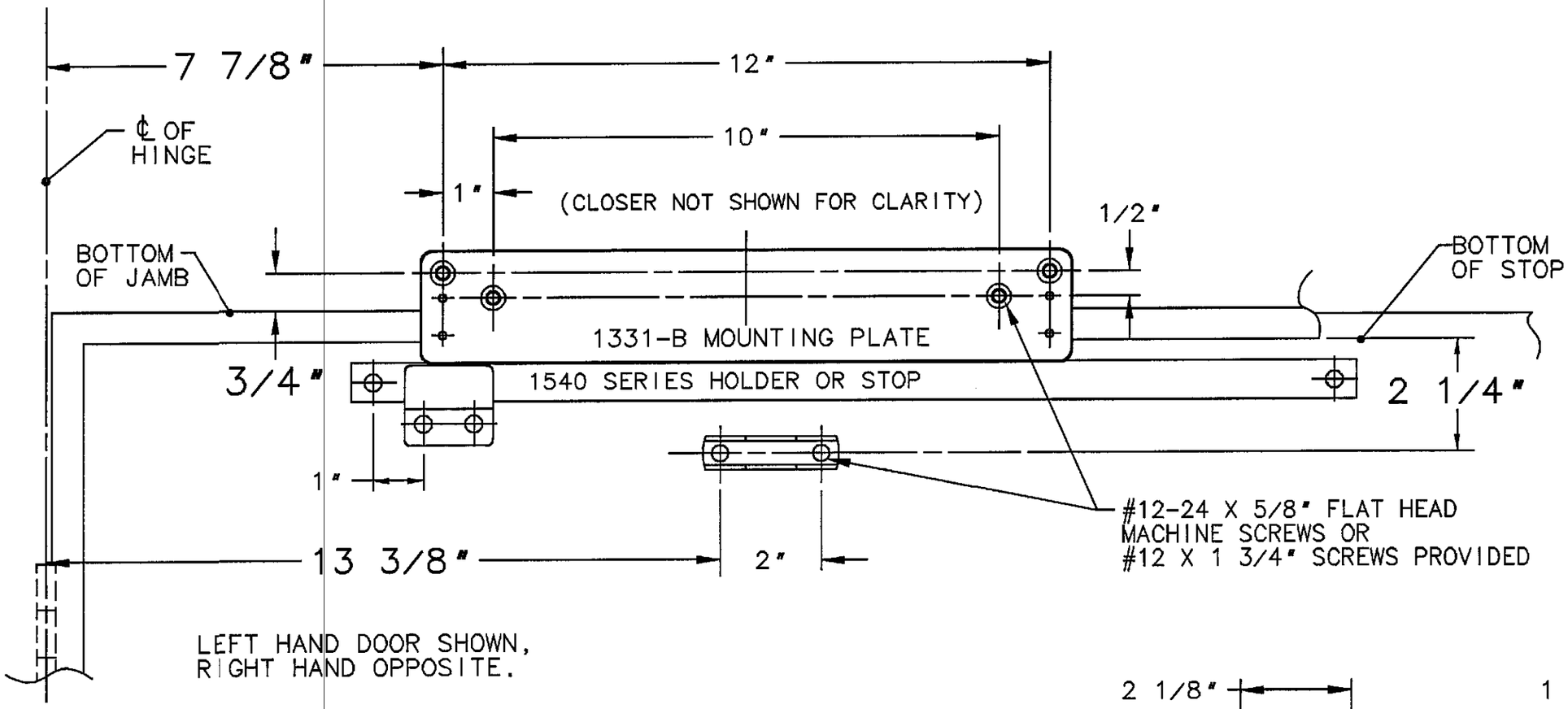

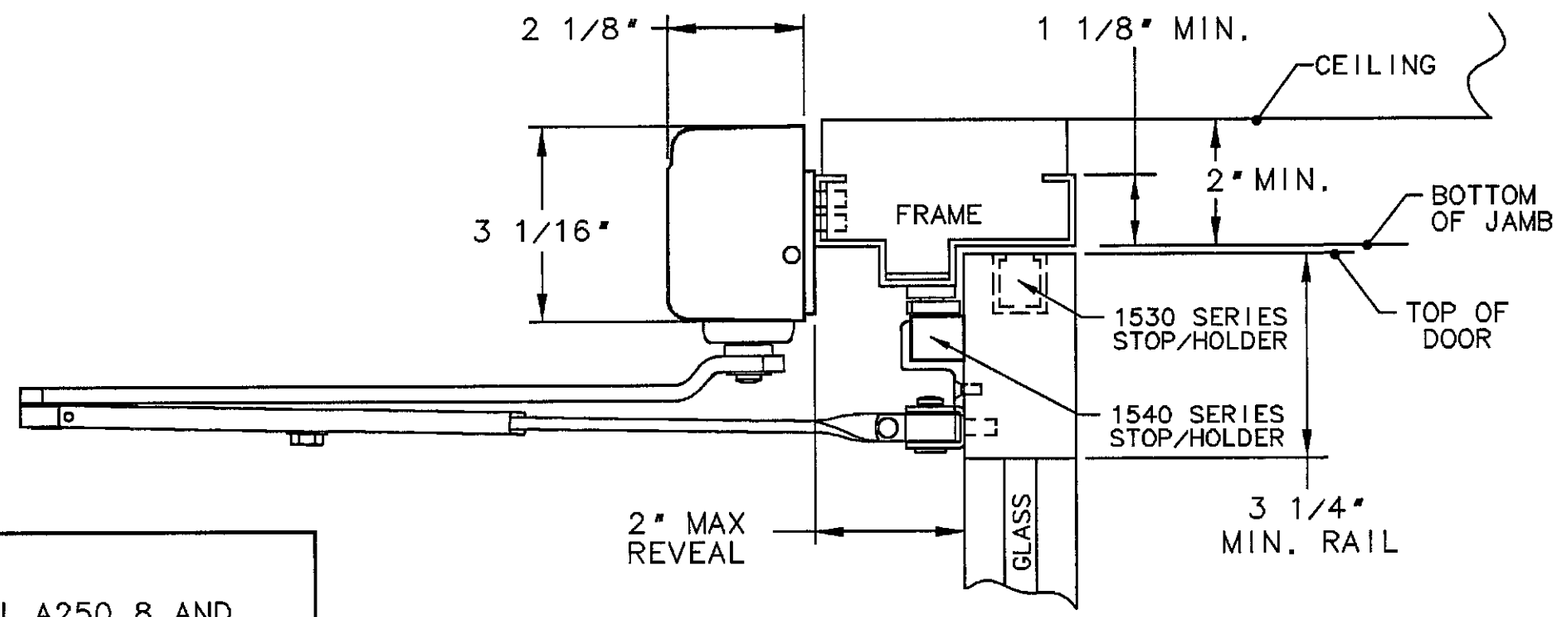

NOTES

1. REINFORCE METAL DOORS AND FRAMES PER ANSI A250.8 AND SDI-100 STANDARDS, 12 GAUGE RECOMMENDED.
2. FOR 1530 HOLDER/STOP INSTALLATION SEE TEMPLATES A7485 THRU A7487
3. FOR 1540 STOP/HOLDER INSTALLATION, SEE TEMPLATES A7488 THRU A7490

SARGENT® Manufacturing Company
100 Sargent Drive New Haven, CT 06511

DATA SHEET: 1331 DOOR CLOSER WITH JO ARM & 1540/1530 STOP WITH 1331-B MOUNTING PLATE TOP JAMB APPLICATION	RELEASE DATE 24 MAY 04
	TEMPLATE NO. A7733 A